FSQ－85EDX

Reduser QE 0.73x System Chart(TX)

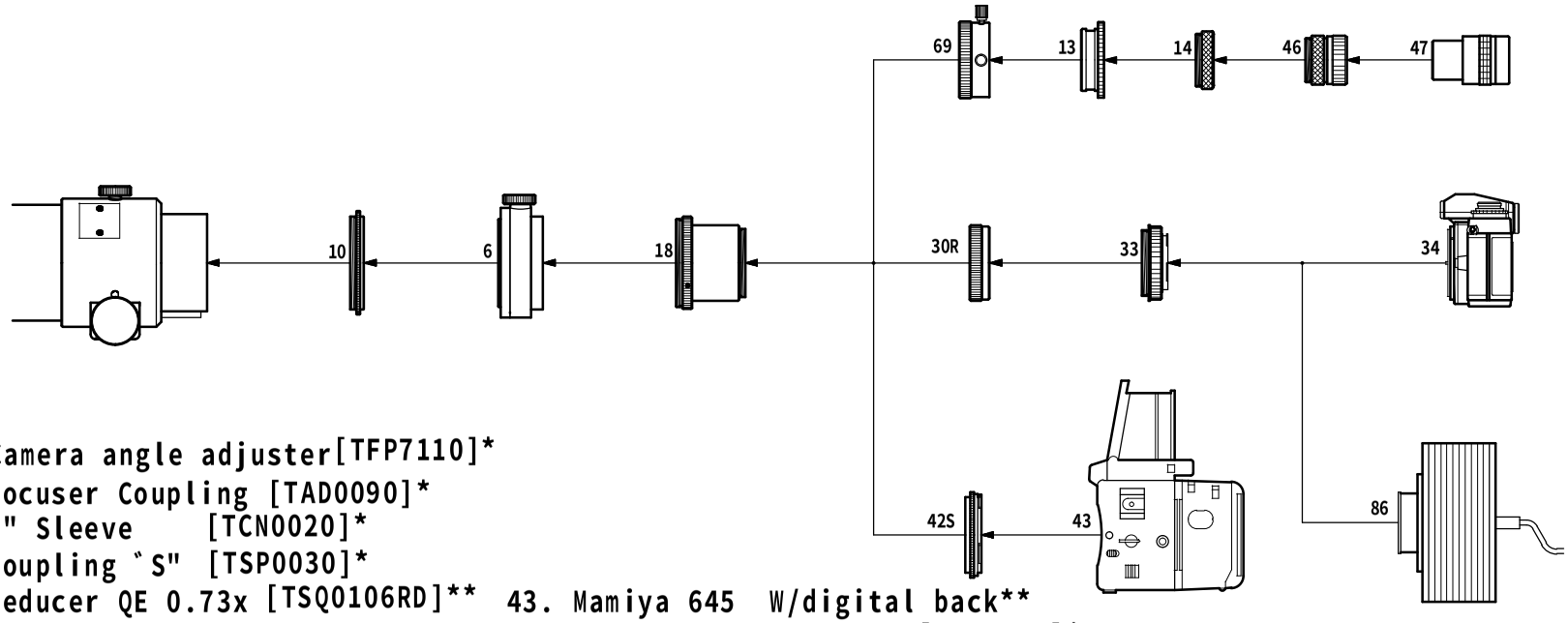

6. Camera angle adjuster[TFP7110]*
10. Focuser Coupling [TAD0090]*
13. 2" Sleeve [TCN0020]*
14. Coupling "S" [TSP0030]*
18. Reducer QE 0.73x [TSQ0106RD]**
30R. CA-35 SKY90 [TCA1020]**
33. Wide mount T-adapter[TMW___]**
34. 35mm DSLR/SLR camera
42S. Mamiya 645 adapter[TOA0301]**
43. Mamiya 645 W/digital back**
46. 1 1/4" Ocular adapter[TOA0200]*
47. 1 1/4" Ocular**
69. 2" Ocular adapter [TOA0401]**
86. CCD camera

* Standard with OTA
** Optional Item