μ-250CR Extender-CR 1.5x System ChartTX

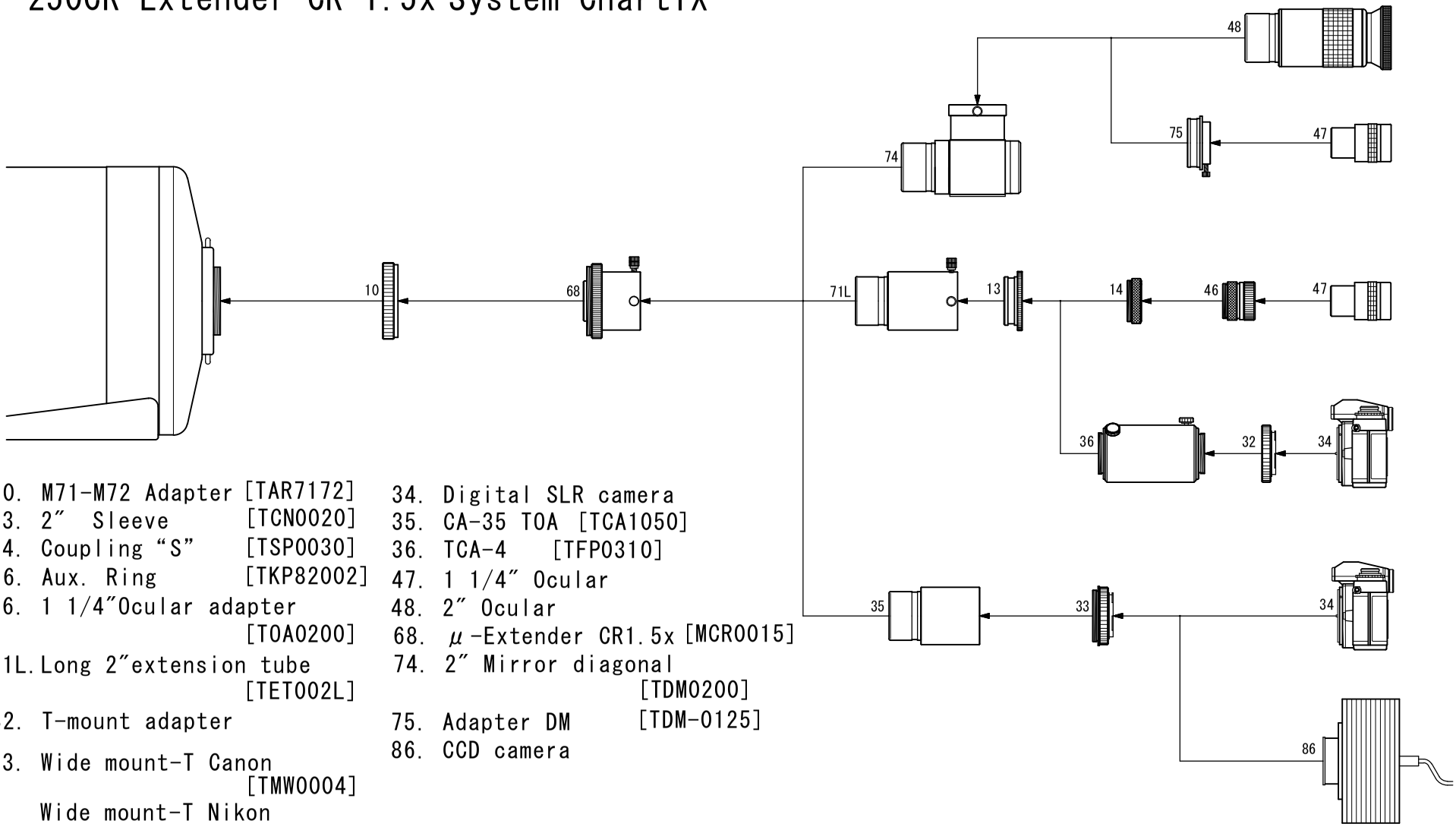

10. M71-M72 Adapter [TAR7172]
13. 2″ Sleeve [TCN0020]
14. Coupling “S” [TSP0030]
16. Aux. Ring [TKP82002]
46. 1 1/4″Ocular adapter [TOA0200]
71L. Long 2″extension tube [TET002L]
32. T-mount adapter
33. Wide mount-T Canon [TMW0004]
    Wide mount-T Nikon [TMW0001]
34. Digital SLR camera
35. CA-35 TOA [TCA1050]
36. TCA-4 [TFP0310]
47. 1 1/4″ Ocular
48. 2″ Ocular
68. μ-Extender CR1.5x [MCR0015]
74. 2″ Mirror diagonal [TDM0200]
75. Adapter DM [TDM-0125]
86. CCD camera