Mewlon-210
Imaging/Visual System Chart(TX)

11. f/6 Visual tube [S] [TSP0050]**
13. 2″ Sleeve [TCN0020]*
14. Coupling `S″ [TSP0030]*
18. Reducer/Corrector [TMC1800]**
26. 5-turret ocular holder**
30. TSC Camera adapter [TSC0160]**
32. T-adapter**

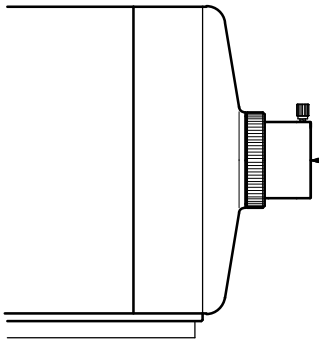

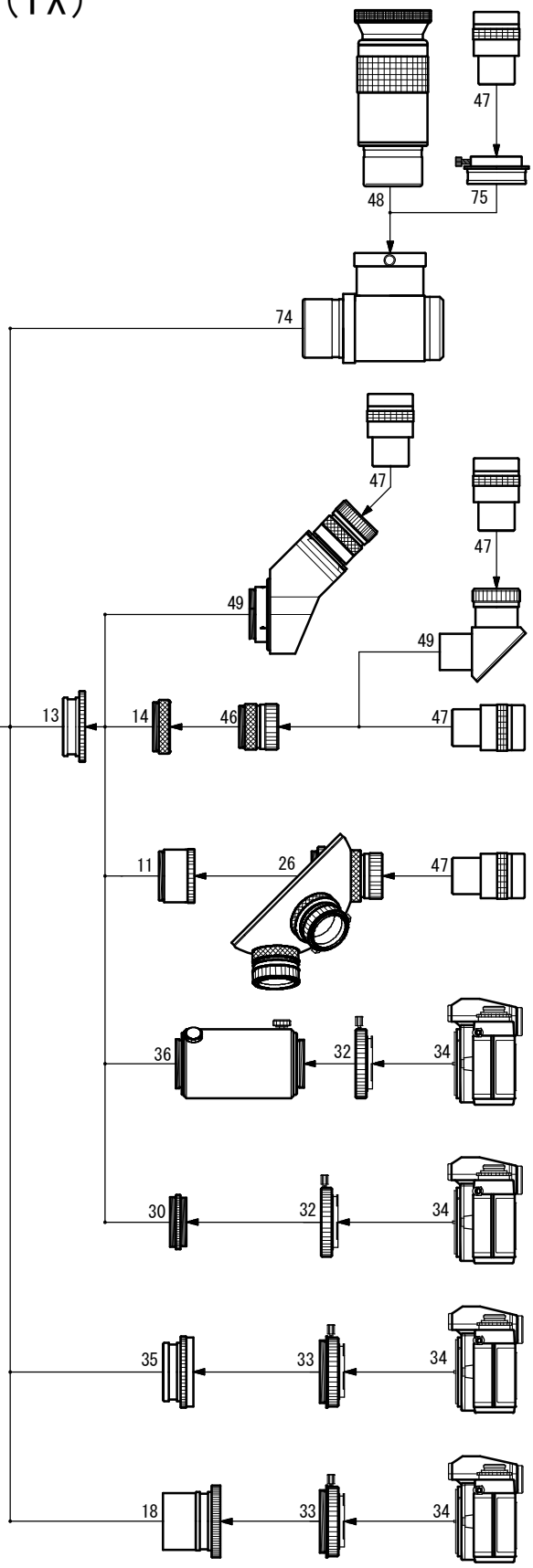

33. Wide mount T-adapter [TMW___]**
34. 35mm DSLR/SLR**
35. 2″ Prime focus ad. [TPF0200]**
36. TCA-4 [TFP0310]**
46. 1 1/4″ Ocular adapter [TCA0200]*
47. 1 1/4″ Ocular**
48. 2″ Ocular**
49. 1 1/4″ Prism diag. [TFP0090]**
74. 2″ Diagonal mirror [TDM0200]**
75. 1 1/4″ Adapter DM**
90. Twin VueTM Bino view [TV00100]**

* Supplied with OTA
** Optional accessory